8. Schematic Diagram

8-1 CD Part

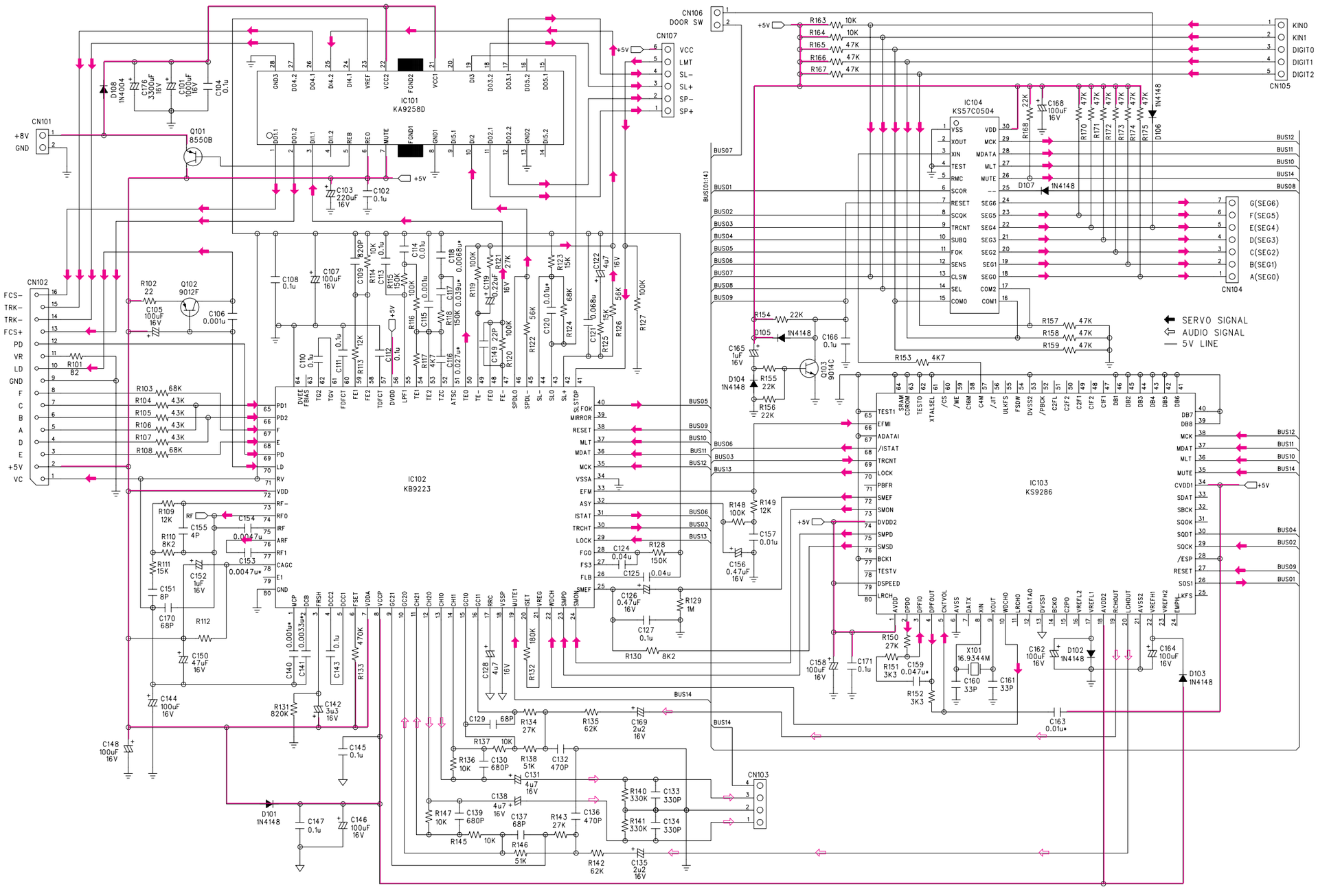

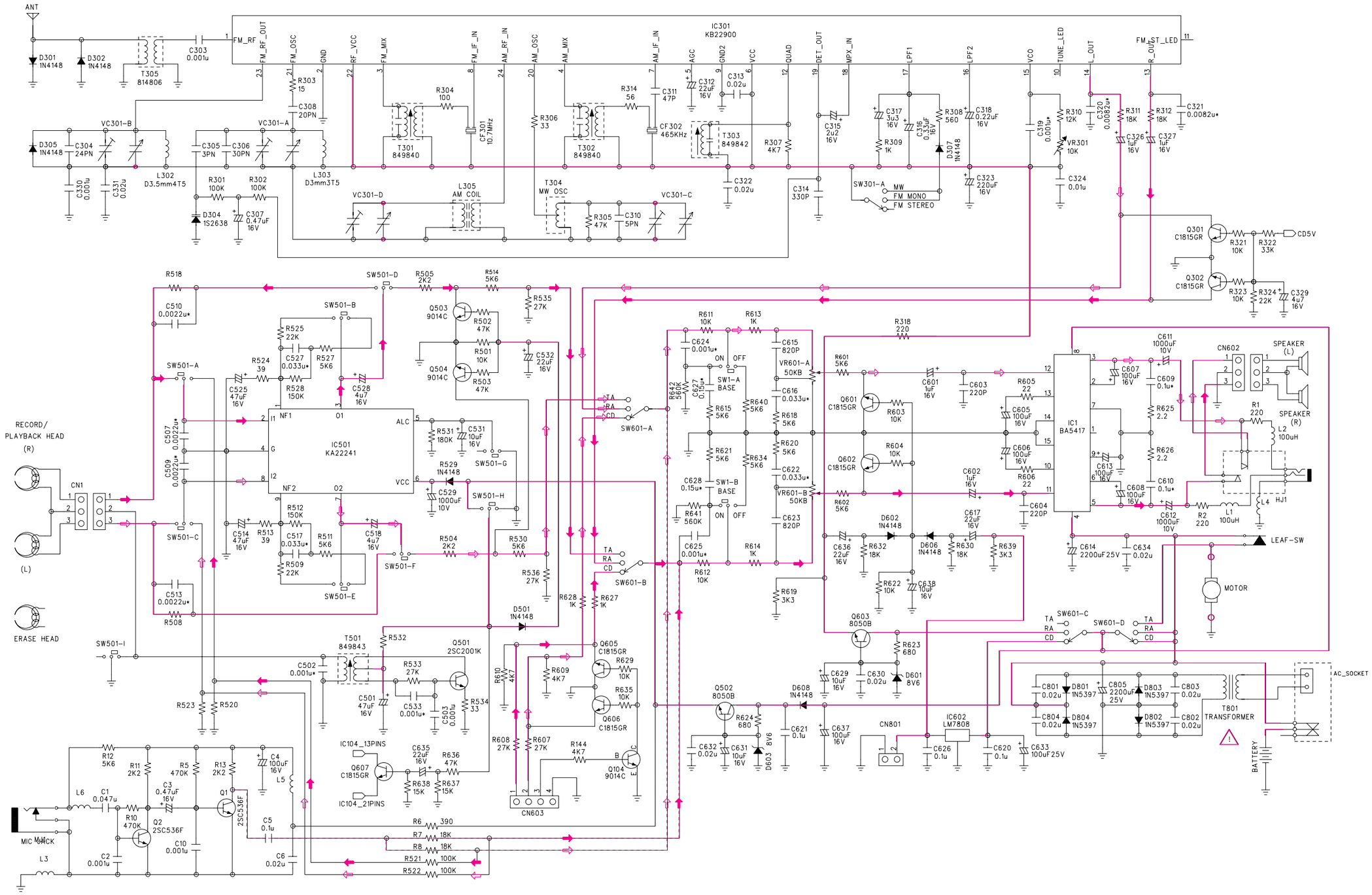
ANT
IC301
KB22900
FM_RF
FM_RF_OUT
FM_OSC
GND
RF_VCC
FM_MIX
FM_IF_IN
AM_RF_IN
AM_OSC
AM_MIX
AM_IF_IN
AGC
GND2
VCC
QUAD
DET_OUT
MPX_IN
LPF1
LPF2
VCO
TUNE_LED
L_OUT
R_OUT
FM_ST_LED
D301 1N4148
D302 1N4148
T305 814806
C303 0.001u
R303 15
C308 20PN
R304 100
CF301 10.7MHz
T301 849840
R306 33
T302 849840
R314 56
C311 47P
CF302 465KHz
T303 849842
C312 22uF 16V
C313 0.02u
R307 4K7
C315 2u2 16V
C317 3u3 16V
R309 1K
C316 0.33uF 16V
R308 560
D307 1N4148
C318 0.22uF 16V
C319 0.001u*
R310 12K
VR301 10K
C320 0.0082u*
R311 18K
R312 18K
C321 0.0082u*
C326 1uF 16V
C327 1uF 16V
C324 0.01u
C323 220uF 16V
C322 0.02u
C314 330P
SW301-A
MW
FM MONO
FM STEREO
VC301-B
VC301-A
VC301-D
VC301-C
D305 1N4148
C304 24PN
C305 3PN
C306 30PN
L302 D3.5mm4T5
L303 D3mm3T5
C330 0.001u
C331 0.02u
R301 100K
R302 100K
D304 1S2638
C307 0.47uF 16V
L305 AM COIL
T304 MW OSC
R305 47K
C310 5PN
Q301 C1815GR
Q302 C1815GR
R321 10K
R322 33K
R323 10K
R324 22K
C329 4u7 16V
CD5V
R518
C510 0.0022u*
SW501-D
R505 2K2
R514 5K6
R535 27K
SW501-B
R525 22K
C527 0.033u*
R527 5K6
R524 39
C525 47uF 16V
R528 150K
C528 4u7 16V
SW501-A
Q503 9014C
R502 47K
R501 10K
Q504 9014C
R503 47K
C532 22uF 16V
RECORD/
PLAYBACK HEAD
(R)
CN1
(L)
ERASE HEAD
C507 0.0022u*
C509 0.0022u*
IC501
KA22241
NF1
O1
I1
G
I2
NF2
O2
ALC
VCC
R531 180K
C531 10uF 16V
SW501-G
R529 1N4148
C529 1000uF 10V
SW501-H
SW501-C
C514 47uF 16V
R513 39
R512 150K
C517 0.033u*
R511 5K6
R509 22K
C518 4u7 16V
SW501-F
SW501-E
R504 2K2
R530 5K6
R536 27K
C513 0.0022u*
R508
SW501-I
D501 1N4148
R628 1K
R627 1K
TA
RA
CD
SW601-B
T501 849843
R532
Q501 2SC2001K
C502 0.001u*
R533 27K
C501 47uF 16V
C533 0.001u*
C503 0.001u
R534 33
R523
R520
R610 4K7
R609 4K7
Q605 C1815GR
R629 10K
R635 10K
Q606 C1815GR
IC104_13PINS
IC104_21PINS
Q607 C1815GR
C635 22uF 16V
R636 47K
R638 15K
R637 15K
R608 27K
R607 27K
R144 4K7
Q104 9014C
CN603
R12 5K6
R11 2K2
R5 470K
R13 2K2
C4 100uF 16V
L5
L6
C1 0.047u
C3 0.47uF 16V
R10 470K
Q2 2SC536F
Q1 2SC536F
C5 0.1u
C10 0.001u
C2 0.001u
C6 0.02u
MIC MUTE
L3
R6 390
R7 18K
R8 18K
R521 100K
R522 100K
R611 10K
R613 1K
C624 0.001u*
ON
OFF
SW1-A BASE
C615 820P
VR601-A 50KB
R642 560K
C612 0.15u*
R615 5K6
R640 5K6
C616 0.033u*
R618 5K6
R621 5K6
R634 5K6
R620 5K6
C622 0.033u*
VR601-B 50KB
C628 0.15u*
SW1-B BASE
R641 560K
C623 820P
C625 0.001u*
R612 10K
R614 1K
R619 3K3
R318 220
R601 5K6
Q601 C1815GR
R603 10K
R604 10K
Q602 C1815GR
R602 5K6
C601 1uF 16V
C603 220P
C602 1uF 16V
C617 22uF 16V
D602 1N4148
C636 22uF 16V
R632 18K
D606 1N4148
R630 18K
R639 3K3
R622 10K
C638 10uF 16V
Q603 8050B
R623 680
C629 10uF 16V
C630 0.02u
D601 8V6
Q502 8050B
D608 1N4148
R624 680
C632 0.02u
C631 10uF 16V
D603 8V6
C621 0.1u
C637 100uF 16V
CN801
IC602 LM7808
C626 0.1u
C620 0.1u
C633 100uF 25V
IC1 BA5417
R605 22
C605 100uF 16V
C606 100uF 16V
R606 22
C604 220P
C611 1000uF 10V
C607 100uF 16V
C609 0.1u*
R625 2.2
C613 100uF 16V
R626 2.2
C608 100uF 16V
C610 0.1u*
C612 1000uF 10V
R2 220
L1 100uF
C614 2200uF 25V
C634 0.02u
CN602
SPEAKER (L)
SPEAKER (R)
R1 220
L2 100uH
L4
HJ1
LEAF-SW
MOTOR
SW601-C
SW601-D
C801 0.02u
D801 1N5397
C805 2200uF 25V
D803 1N5397
C803 0.02u
C804 0.02u
D804 1N5397
D802 1N5397
C802 0.02u
T801 TRANSFORMER
AC_SOCKET
BATTERY